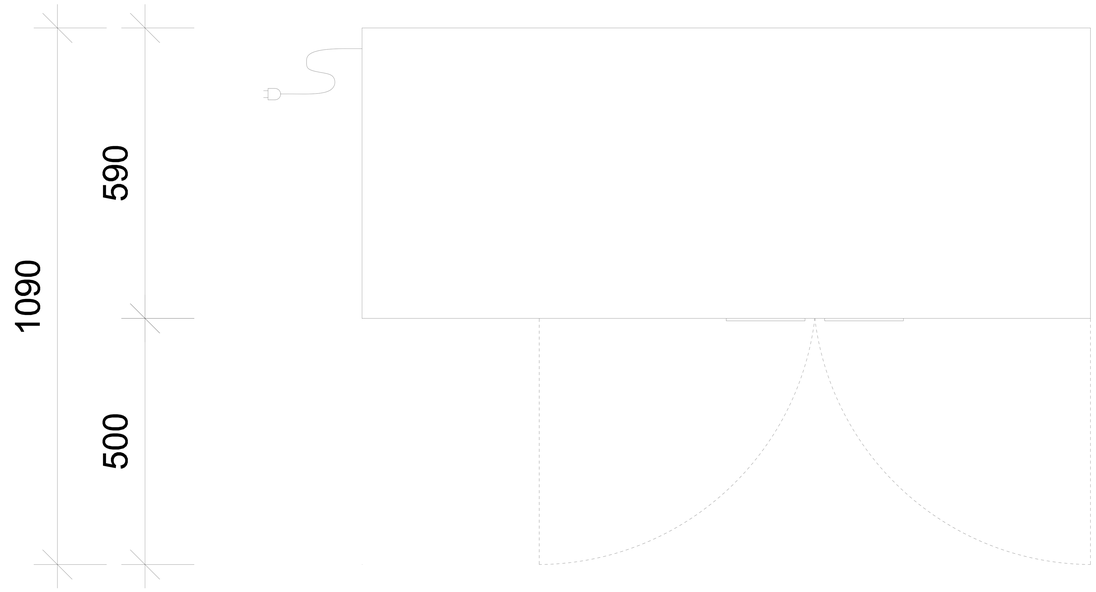
1090
590
500

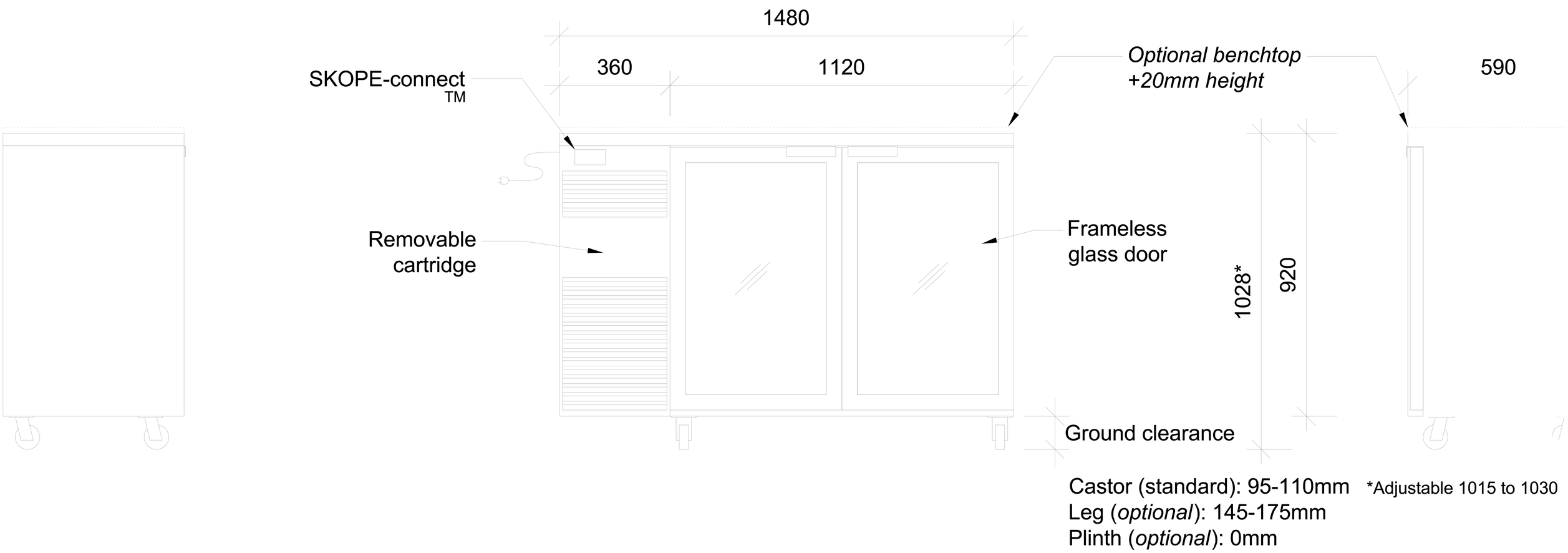
1480
360
1120
SKOPE-connect
TM
Optional benchtop
+20mm height
590
Removable
cartridge
Frameless
glass door
1028*
920
Ground clearance
Castor (standard): 95-110mm
Leg (*optional*): 145-175mm
Plinth (*optional*): 0mm
*Adjustable 1015 to 1030

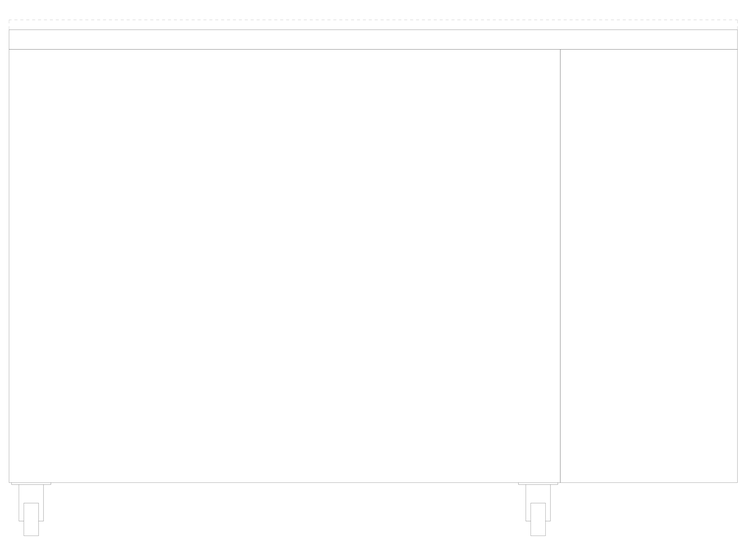

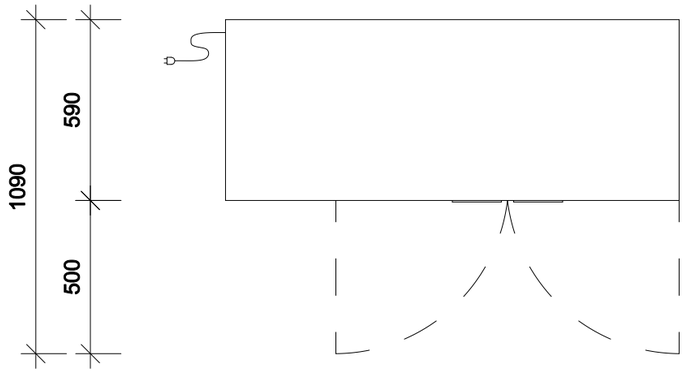

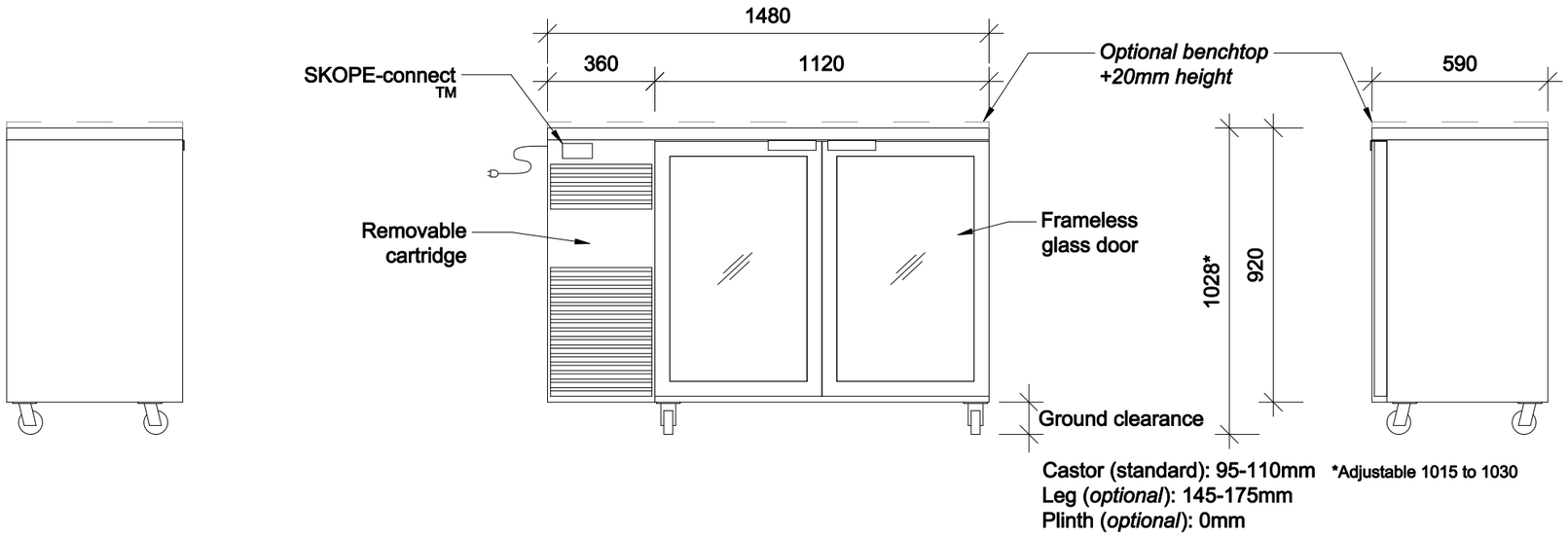

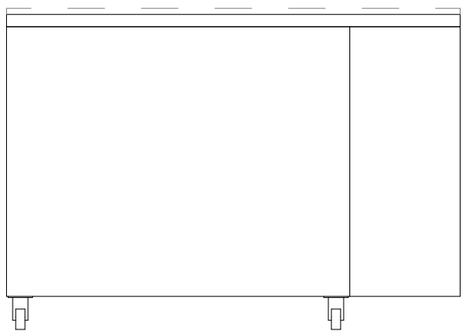

Cabinet Dimensions:

	External	Internal
Width (mm):	1480	1020
Depth (mm):	590	530
Height (mm):	1028 (std. castors) 920 (plinth mount)	758
Weight (kg):	180	
Capacity (L):	410	
Footprint (m^2):	0.87	

Electrical Voltage (V):	240
Electrical Ampere (A):	2.6
Electrical Frequency (Hz):	50
MEPS TEC:	2.1 kWh/24h
Refrigerant:	R290 / 81g

Dimensional Tolerances
Before installing this cabinet allow for the following dimensional tolerances:

Linear Dimensions	**Overall Cabinet Dimensions**
Less than 1 metre	+5mm
More than 1 metre	-5mm to +10mm
Length of Multiple Cabinets	
At each joint	**At each end wall**
+5mm	+15mm
-5mm to +10mm	+15mm

Industries Limited

66 Princess St. PO Box 1091
Chrischurch, New Zealand
New Zealand Freephone: 0900 947 5673
Australian Freephone: 1800 121 535
Email: enquiry@skope.co.nz
Website: www.skope.co.nz

Model:
BB.2.GSW

Description:
BB Series, Two Glass Swing Door Fridge

Unless Otherwise Specified:

Folded Dimension:	Overall
Linear Tolerances:	± 0.5mm
Angular Tolerances:	± 0.5mm
Units:	Millimeters

Scale: 1 : 20

Revision:

Copyright © SKOPE Industries Limited