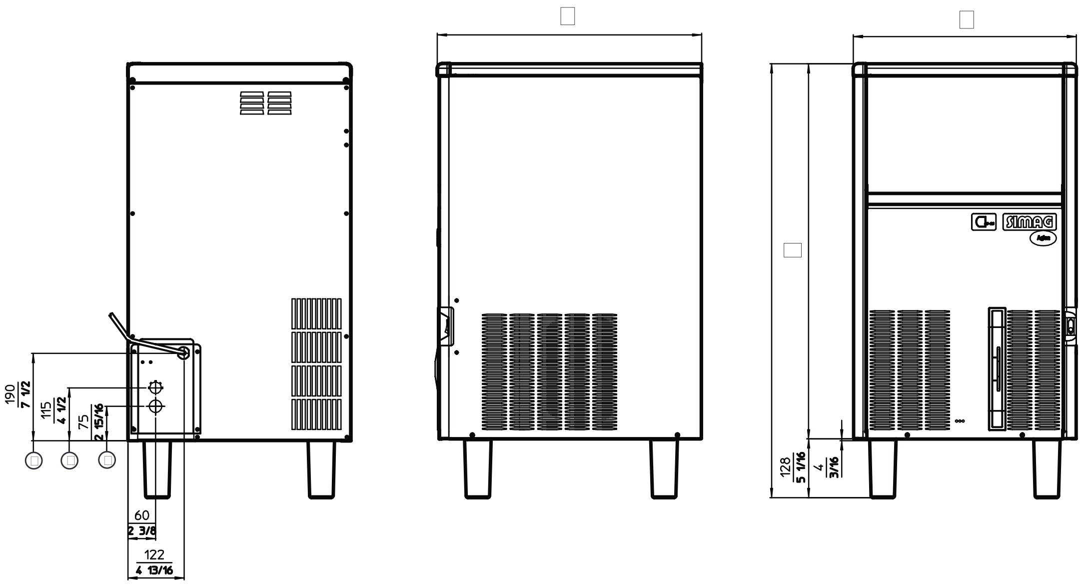
190
7 1/2
115
4 1/2
75
2 15/16
60
2 3/8
122
4 13/16
128
5 1/16
4
3/16
SIMAG

				[illegible]	[illegible]
[illegible]				[illegible]	[illegible]
[illegible]				[illegible]	[illegible]
[illegible]				[illegible]	[illegible]

□□□□□□□

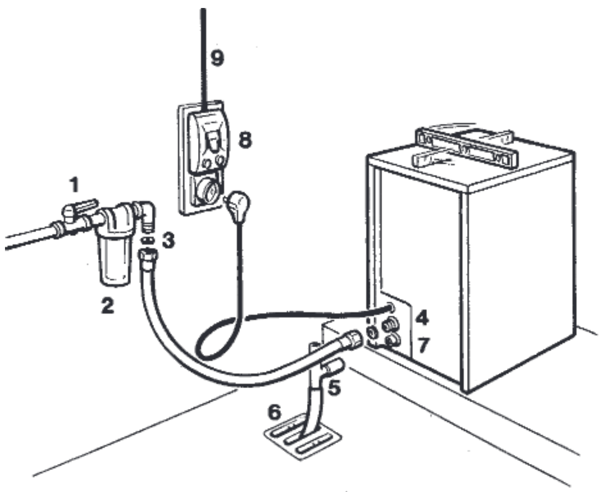
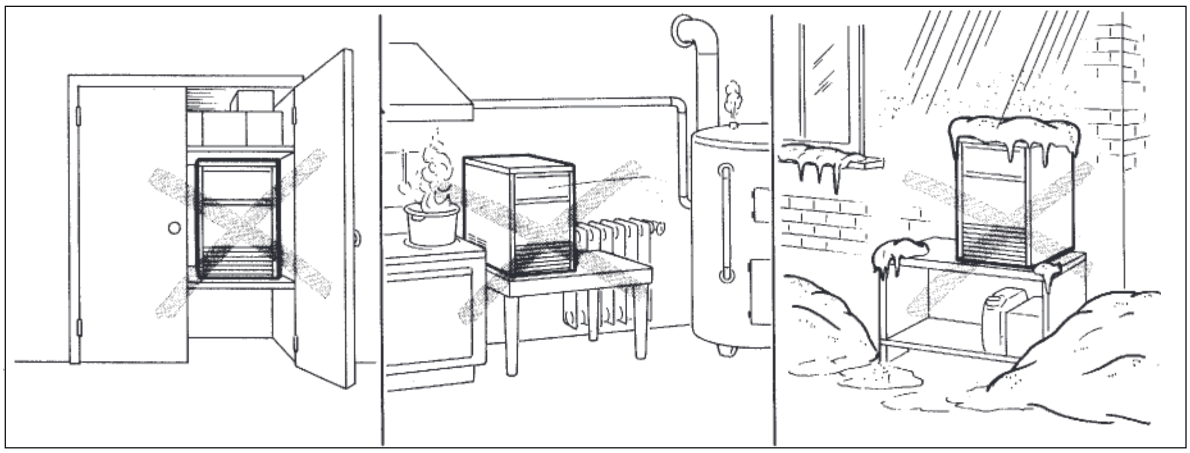
9
8
1
3
2
4
7
5
6