SANDWICH PREP TABLE REFRIGERATORS

SIMCO
CATERING EQUIPMENT

view

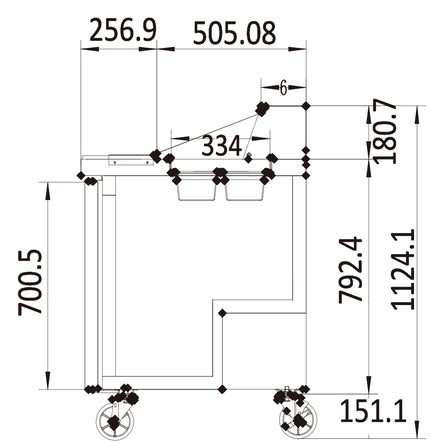

MSF8301

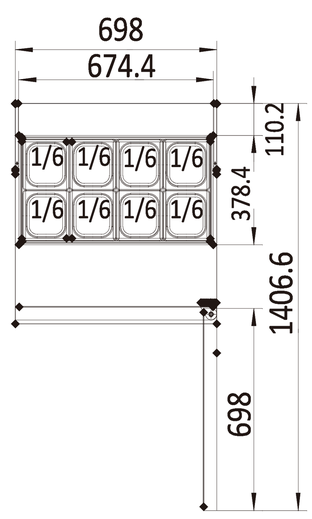

MSF8302

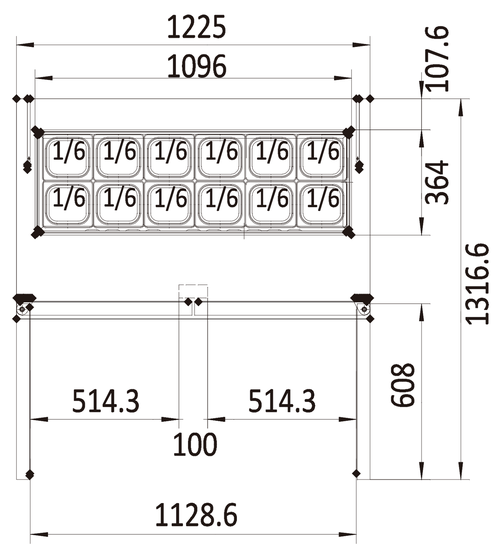

MSF8304

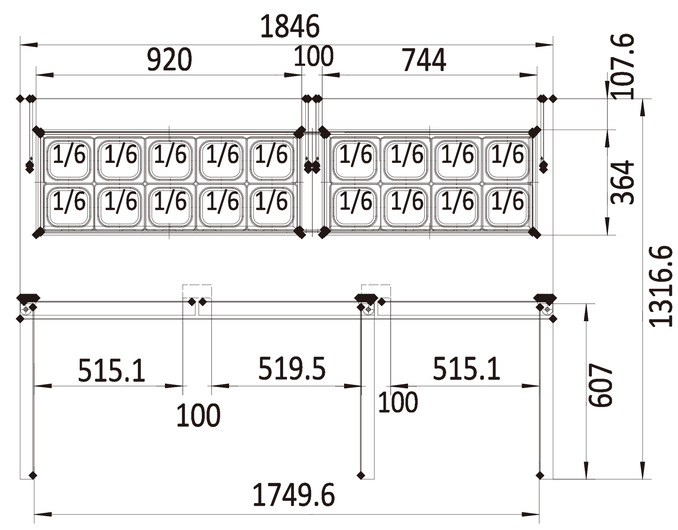

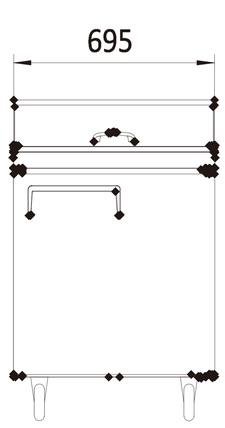

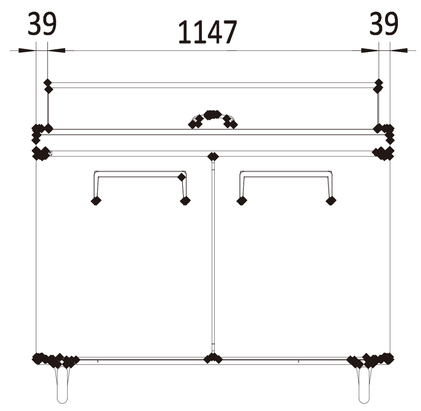

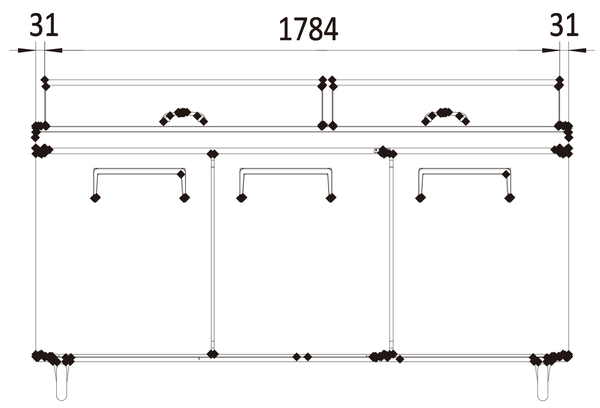

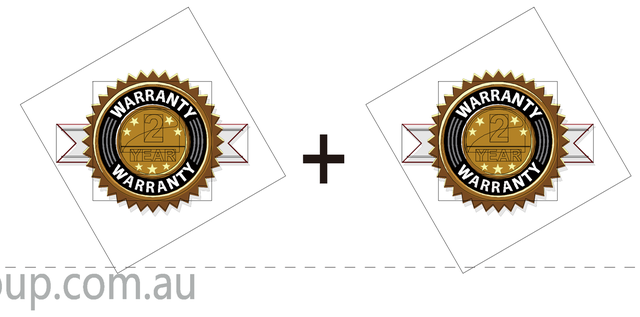

* **2 YEARS WARRANTY ON ALL PARTS & LABOUR**
EXTRA 2 YEARS WARRANTY ON PARTS WHEN YOU REGISTER WITH US ONLINE